The Embedded I/O Company

TEWS TECHNOLOGIES

TPMC671

16 Digital Inputs (24V)

16 Digital Outputs (24V, 0.5A)

Version 1.0

User Manual

Issue 1.0.4

September 2009

TEWS TECHNOLOGIES GmbH

Am Bahnhof 7 25469 Halstenbek, Germany

Phone: +49 (0) 4101 4058 0 Fax: +49 (0) 4101 4058 19

e-mail: info@tews.com www.tews.com

TPMC671-10

16 digital inputs, 16 digital high side switch outputs, front panel I/O

TPMC671-11

16 digital inputs, 16 digital low side switch outputs, front panel I/O

TPMC671-20

16 digital inputs, 16 digital high side switch outputs, P14 I/O

TPMC671-21

16 digital inputs, 16 digital low side switch outputs, P14 I/O

Style Conventions

Hexadecimal characters are specified with prefix 0x, i.e. 0x029E (that means hexadecimal value 029E).

For signals on hardware products, an ‘Active Low’ is represented by the signal name with # following, i.e. IP_RESET#.

Access terms are described as:

W	Write Only
R	Read Only
R/W	Read/Write
R/C	Read/Clear
R/S	Read/Set

Issue	Description	Date
1.0	First Issue	September 2004
1.1	Correction of PCI Header	October 2004
1.2	New address TEWS LLC	September 2006
1.3	Correction Functional Description of Control / Status Register	June 2008
1.0.4	New User Manual Issue Notation	September 2009

Table of Contents

List of Figures

List of Tables

1 Product Description

The TPMC671 is a standard single-width 32 bit PMC with 16 digital inputs (24V) galvanically isolated from the computer system by optocouplers. The inputs are also potential free to each other. A high performance input circuit ensures a defined switching point and polarization protection against confusing the pole.

All inputs have a common electronic debounce circuit with a freely programmable debounce time.

All inputs can generate an interrupt. The signal edge handling is programmable to interrupt on rising, falling or both edges of the input signal.

The TPMC671 has 16 digital high side or low side switches (build option) with galvanic isolation from the computer system by optocouplers. The outputs are isolated against each other in groups of four outputs. All outputs are protected against short-circuit and thermal overload. The output drivers are capable of driving 0.5A continuous per channel.

A hardware watchdog clears all outputs in case of trigger fail. The TPMC671-1x provides front panel I/O, the TPMC671-2x provides P14 I/O.

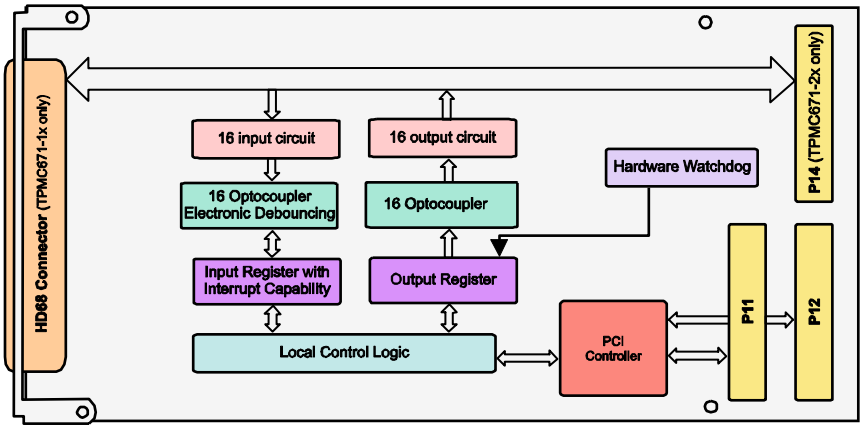

Figure 1-1 : Block Diagram

2 Technical Specification

Mechanical Interface	PCI Mezzanine Card (PMC) Interface Single Size	
Electrical Interface	PCI Rev. 2.1 compliant 33 MHz / 32 bit PCI 3.3V and 5V PCI Signaling Voltage	
On Board Devices		
PCI Target Chip	PCI9030 (PLX Technology)	
I/O Interface		
Number of Inputs	16 digital Inputs	
Input Isolation	Optocouplers for galvanic isolation, also isolated to each other	
Input Voltage	24V DC typical	
Input Current	4.2mA typical at 24V input voltage	
Input Switching Level	12V typical, 7.5V minimum, 14V maximum	
Input Signal Debouncing	Electronic debouncing (7µs to 440 ms in steps of 7µs) common for all input channels, can be disabled	
Input Interrupts	16 input interrupts (Trigger on rising, falling or both edges)	
Outputs	TPMC671-10 / -20 16 digital high side switch Outputs TPMC671-11 / -21 16 digital low side switch Outputs	
Output Isolation	Optocouplers for galvanic isolation, also isolated to each other in groups of four outputs	
External Output Voltage	24V DC typical, 6V DC minimum, 48V DC maximum	
Output Current	0.5A typical (0.3A for voltages over 32V)	
Short Circuit Current	0.8A typical	
Output Voltage Drop	1.1V typical at 0.5A	
Output Protection	Overload, short circuit, GND and Vs open wire protection, thermal shutdown	
I/O Connector	TPMC671-10 / -11 TPMC671-20 / -21	HD68 connector SCSI-3 type connector PMC P14 I/O (64 pin Mezzanine connector)
Physical Data		
Power Requirements	85 mA typical @ +3.3V DC with all inputs and outputs inactive 200 mA typical @ +3.3V DC with all inputs and outputs active	
Temperature Range	Operating Storage	-25 °C to +85 °C -55°C to +125°C
MTBF	252000 h	
Humidity	5 – 95 % non-condensing	
Weight	72 g	

Table 2-1 : Technical Specification

3 Functional Description

3.1 Digital Outputs

3.1.1 Optical Isolation

The TPMC671 has 16 high side switch (TPMC671-10/20) or 16 low side switch (TPMC671-11/21) digital outputs. The standard signal level for these outputs is 24V DC. All outputs are isolated by optocouplers from the computer system and are also isolated against each other in groups of four outputs.

GROUP	VS / standard 24V DC	GROUND	OUTPUT
O1	VS_O1	GND_O1	OUT 1 OUT 2 OUT 3 OUT 4
O2	VS_O	GND_O2	OUT 5 OUT 6 OUT 7 OUT 8
O3	VS_O3	GND_O3	OUT 9 OUT 10 OUT 11 OUT 12
O4	VS_O4	GND_O4	OUT 13 OUT 14 OUT 15 OUT 16

Table 3-1 : Isolated Digital Outputs

3.1.2 Output Polarity

Each output can be individually switched to the according power supply VS_Ox (high side switch) or GND_Ox (low side switch).

3.1.3 Overload Protection

The output drivers used on the TPMC671 are smart drivers TDE1707. The maximum continuous output current is 0.5A. The output circuits are protected against overload, short circuit and over temperature. In case of such a failure the corresponding output is switched off until the error condition is removed. Then the output returns automatically to normal operation and the state programmed in the Data Output Register.

For details about the protection of the TDE1707 please refer to the data sheet which is part of the TPMC671-ED Engineering Documentation.

3.1.4 Output Watchdog

Writing ‘1’ into bit 1 of the Global Control Register and the following first write access to the Data Output Register enables the hardware watchdog function. The status of the watchdog is indicated at the bit 3 of Global Control Register.

Any software access (read or write) to the Data Output Register of the TPMC670 will retrigger the watchdog. The maximum time between two accesses is set to 120ms, if the time expires without a software access all outputs go into the ‘OFF’ state. At the same time the watchdog status will change from ‘0’ to ‘1’ and lock the Data Output Register. This prevents a write access to the Data Output Register.

Writing ‘1’ to the watchdog status (Bit 3 Control Register) clears this bit and also unlocks the Output Register. After unlocking the Data Output Register the outputs stay in the ‘OFF’ state till the next write access to this register.

The watchdog is disabled after power-on or reset.

3.2 Digital Inputs

3.2.1 Optical Isolation

The TPMC671 has 16 digital inputs. The standard signal level for these inputs is 24V DC. The switching level of the inputs is between 7.5V and 14V. All inputs are isolated by optocouplers from the computer system and are also isolated against each other.

3.2.2 Debounce Function

A programmable debounce function common for all inputs is implemented on the TPMC671. There is only one debounce time adjustable for all 16 digital inputs.

If the debounce function is enabled, the input pin must be static for the programmed debounce time before the rising or falling edge is recognized as valid. So only after a correct identification the Data Input Register is updated and an interrupt is generated.

The debounce function is disabled after power-on and reset. The debounce time is set to value ‘0’ after power-on and reset.

3.2.3 Interrupt Logic

Interrupt generation can be individually programmed for each channel and input transition. To enable the interrupt after a reset, the Global Interrupt Enable bit in the Control Register must be set to the value ‘1’. Also the respective bit for rising or falling edge in the Rising Edge / Falling Edge Interrupt Enable Registers must be set.

The Global Interrupt Enable and also all individually interrupt enable bits are disabled after power-on and reset.

4 Local Space Addressing

4.1 PCI9030 Local Space Configuration

The local on board addressable regions are accessed from the PCI side by using the PCI9030 local spaces.

PCI9030 Local Space	PCI9030 PCI Base Address (Offset in PCI Configuration Space)	PCI Space Mapping	Size (Byte)	Port Width (Bit)	Endian Mode	Description
0	2 (0x18)	IO	16	16	BIG	Local Register Space
1	3 (0x1C)	-	-	-	-	Not Used
2	4 (0x20)	-	-	-	-	Not Used
3	5 (0x24)	-	-	-	-	Not Used

Table 4-1 : PCI9030 Local Space Configuration

4.2 Local Register Space Address Map

PCI Base Address: PCI9030 PCI Base Address 2 (Offset 0x18 in PCI Configuration Space).

Offset to PCI Base Address 2	Register Name	Size (Bit)
0x00	Data Output Register	16
0x02	Data Input Register	16
0x04	Control / Status Register	16
0x06	Rising Edge Interrupt Enable Register	16
0x08	Falling Edge Interrupt Enable Register	16
0x0A	Rising Edge Interrupt Status Register	16
0x0C	Falling Edge Interrupt Status Register	16
0x0E	Debounce Time Register	16

Table 4-2 : FPGA Register Space

4.2.1 Data Output Register

The Data Output Register is a word wide read/write register that is used to set or clear the different outputs of the TPMC671.

Bit	Symbol	Description	Access	Reset Value
15	OUTPUT16	To set an output line active, write ‘1’ to the corresponding bit. For the inactive state write ‘0’ to the corresponding bit. 0 : inactive 1 : active Bit 0 represents output line 1 and bit 15 represents output line 16. After power-on or reset the Data Output Register is cleared to ‘0’, all outputs are inactive.	R/W	0x0000
14	OUTPUT15			
13	OUTPUT14			
12	OUTPUT13			
11	OUTPUT12			
10	OUTPUT11			
9	OUTPUT10			
8	OUTPUT9			
7	OUTPUT8			
6	OUTPUT7			
5	OUTPUT6			
4	OUTPUT5			
3	OUTPUT4			
2	OUTPUT3			
1	OUTPUT2			
0	OUTPUT1			

Table 4-3 : Data Output Register

4.2.2 Data Input Register

The Data Input Register is a word wide read only register that reflects the actual status of the inputs.

Bit	Symbol	Description	Access	Reset Value
15	INPUT16	0 : Input line is logic low 1 : Input line is logic high Bit 0 represents Input Line 1 and bit 15 represents the Input Line 16.	R	-
14	INPUT15			
13	INPUT14			
12	INPUT13			
11	INPUT12			
10	INPUT11			
9	INPUT10			
8	INPUT9			
7	INPUT8			
6	INPUT7			
5	INPUT6			
4	INPUT5			
3	INPUT4			
2	INPUT3			
1	INPUT2			
0	INPUT1			

Table 4-4 : Data Input Register

4.2.3 Control / Status Register

The Control / Status Register is a read/write register.

Bit	Symbol	Description	Access	Reset Value
15 : 4	-	Not used and undefined during reads	-	-
3	WD_STA	Watchdog Status Flag 1 = indicates that the watchdog had recognized a failure and had disabled all output channels. Also the Output Register is locked. Writing '1' to this bit unlocks the Output Register. 0 = signals normal operation	R/W	0
2	DB_ENA	Debounce Enable 1 = enables the debounce function for all 16 inputs 0 = disables debounce function	R/W	0
1	WD_ENA	Watchdog Enable 1 = enables watchdog for all 16 outputs 0 = disables watchdog function	R/W	0
0	INT_ENA	Global Interrupt Enable 1 = globally enables interrupt for all 16 inputs 0 = globally disables interrupts The input channels generate interrupts at pin INTA# of the PCI bus.	R/W	0

Table 4-5 : Control / Status Register

Additional to this Global Interrupt Enable the Interrupt INTA# must be enabled in the PCI Interrupt Line Register (PCIILR; 0x3C) of the PCI Controller PCI9030. Default after power-on and reset is: INTA# is enabled.

The watchdog status is only active if the watchdog is enabled.

4.2.4 Rising Edge Interrupt Enable Register

The Rising Edge Interrupt Enable Register is a word wide read/write register.

Bit	Symbol	Description	Access	Reset Value
15	INT_ENA_H16	0 : Interrupt for input line disabled 1 : Interrupt for input line enabled Bit 0 of the Rising Edge Interrupt Enable Register enables the interrupt of input line 1 for the rising edge. Bit 15 enables interrupt of input line 16 for rising edge. All other bits are equivalent.	R/W	0x0000
14	INT_ENA_H15			
13	INT_ENA_H14			
12	INT_ENA_H13			
11	INT_ENA_H12			
10	INT_ENA_H11			
9	INT_ENA_H10			
8	INT_ENA_H9			
7	INT_ENA_H8			
6	INT_ENA_H7			
5	INT_ENA_H6			
4	INT_ENA_H5			
3	INT_ENA_H4			
2	INT_ENA_H3			
1	INT_ENA_H2			
0	INT_ENA_H1			

Table 4-6 : Rising Edge Interrupt Enable Register

4.2.5 Falling Edge Interrupt Enable Register

The Falling Edge Interrupt Enable Register is a word wide read/write register.

Bit	Symbol	Description	Access	Reset Value
15	INT_ENA_L16	0 : Interrupt for input line disabled 1 : Interrupt for input line enabled Bit 0 of the Falling Edge Interrupt Enable Register enables the interrupt of input line 1 for the falling edge. Bit 15 enables interrupt of input line 16 for falling edge. All other bits are equivalent.	R/W	0x0000
14	INT_ENA_L15			
13	INT_ENA_L14			
12	INT_ENA_L13			
11	INT_ENA_L12			
10	INT_ENA_L11			
9	INT_ENA_L10			
8	INT_ENA_L9			
7	INT_ENA_L8			
6	INT_ENA_L7			
5	INT_ENA_L6			
4	INT_ENA_L5			
3	INT_ENA_L4			
2	INT_ENA_L3			
1	INT_ENA_L2			
0	INT_ENA_L1			

Table 4-7 : Falling Edge Interrupt Enable Register

4.2.6 Rising Edge Interrupt Status Register

The Rising Edge Interrupt Status Register is a word wide read/write register.

Bit	Symbol	Description	Access	Reset Value
15	INT_STA_H16	Read access: 0 = no interrupt request pending 1 = interrupt request pending Write access: 0 = no effect 1 = clear pending interrupt request Bit 0 of this register reflects the interrupt request state of input line 1 for the rising edge, bit 15 reflects the interrupt request state of input line 16 for the rising edge. An interrupt request for a specific input line is cleared by writing ‘1’ to the according bit of the Rising Edge Interrupt Status Register.	R/W	0x0000
14	INT_STA_H15			
13	INT_STA_H14			
12	INT_STA_H13			
11	INT_STA_H12			
10	INT_STA_H11			
9	INT_STA_H10			
8	INT_STA_H9			
7	INT_STA_H8			
6	INT_STA_H7			
5	INT_STA_H6			
4	INT_STA_H5			
3	INT_STA_H4			
2	INT_STA_H3			
1	INT_STA_H2			
0	INT_STA_H1			

Table 4-8 : Rising Edge Interrupt Status Register

4.2.7 Falling Edge Interrupt Status Register

The Falling Edge Interrupt Status Register is a word wide read/write register.

Bit	Symbol	Description	Access	Reset Value
15	INT_STA_L16	Read access: 0 = no interrupt request pending 1 = interrupt request pending Write access: 0 = no effect 1 = clear pending interrupt request Bit 0 of this register reflects the interrupt request state of input line 1 for the falling edge, bit 15 reflects the interrupt request state of input line 16 for the falling edge. An interrupt request for a specific input line is cleared by writing ‘1’ to the according bit of the Falling Edge Interrupt Status Register.	R/W	0x0000
14	INT_STA_L15			
13	INT_STA_L14			
12	INT_STA_L13			
11	INT_STA_L12			
10	INT_STA_L11			
9	INT_STA_L10			
8	INT_STA_L9			
7	INT_STA_L8			
6	INT_STA_L7			
5	INT_STA_L6			
4	INT_STA_L5			
3	INT_STA_L4			
2	INT_STA_L3			
1	INT_STA_L2			
0	INT_STA_L1			

Table 4-9 : Falling Edge Interrupt Status Register

4.2.8 Debounce Time Register

The Debounce Time Register is a word wide read/write register.

Bit	Symbol	Description	Access	Reset Value
15	DB_TIME	The debounce time could be programmed by writing a hexadecimal value in the register. One hexadecimal step corresponds to a debounce time of about 7µs. min debounce time: 7µs max debounce time: 440ms debounce step: ca. 7µs The value 0 in this register sets the debounce time to a minimum of 7µs. This is the default state after power-on or reset. Any debounce time in the range of 7µs to 440ms can be programmed in steps of ca. 7µs. The debounce time is common for all 16 inputs.	R/W	0x0000
14				
13				
12				
11				
10				
9				
8				
7				
6				
5				
4				
3				
2				
1				
0				

Table 4-10: Debounce Time Register

To use the programmable debounce time, the Debounce Enable Bit of the Control / Status Register must be set to '1'.

If the Debounce Enable Bit of the Control / Status Register is set to '0', no debounce function is active for all inputs.

The following formulas can be used to determine the preload value.

$$t_{db} = (Z+1)\cdot\frac{64}{PCICLK}\cdot 3.5$$

$$Z = \frac{t_{db}}{64\cdot 3.5}\cdot PCICLK - 1$$

$$t_{max} = (Z+1)\cdot\frac{64}{PCICLK}\cdot 4$$

$$t_{min} = (Z+1)\cdot\frac{64}{PCICLK}\cdot 3$$

t_{db}	-	typical debounce time [s]
Z	-	preload value
PCICLK	-	33.33 MHz
t_{max}	-	max. debounce time [s]
t_{min}	-	min. debounce time [s]

Figure 4-1 : Formulas to determine preload value

Debounce Time Examples:

typ. Debounce Time [ms]	inaccuracy [ms]	Counter decimal	Counter hex.
0.007	± 0.001	0	0x0000
0.014	± 0.002	1	0x0001
0.021	± 0.003	2	0x0002
0.027	± 0.004	3	0x0003
0.034	± 0.005	4	0x0004
0.041	± 0.006	5	0x0005
0.050	± 0.007	6	0x0006
0.060	± 0.008	7	0x0007
0.070	± 0.010	9	0x0009
0.080	± 0.011	10	0x000A
0.090	± 0.012	12	0x000C
0.100	± 0.013	13	0x000D
0.200	± 0.028	28	0x001C
0.300	± 0.042	43	0x002B
0.400	± 0.057	58	0x003A
0.500	± 0.071	73	0x0049
0.600	± 0.085	88	0x0058
0.700	± 0.100	103	0x0067
0.800	± 0.114	118	0x0076
0.900	± 0.128	132	0x0084
1.000	± 0.142	147	0x0093
2.000	± 0.285	296	0x0128
3.000	± 0.428	445	0x01BD
4.000	± 0.571	594	0x0252
5.000	± 0.714	743	0x02E7
6.000	± 0.856	891	0x037B
7.000	± 0.999	1040	0x0410
8.000	± 1.142	1189	0x04A5
9.000	± 1.285	1338	0x053A
10.000	± 1.428	1487	0x05CF
20.000	± 2.857	2975	0x0B9F
50.000	± 7.142	7439	0x1D0F
100.000	± 14.285	14879	0x3A1F
200.000	± 28.571	29760	0x7440
250.000	± 35.714	37201	0x9151
300.000	± 42.856	44641	0xAE61
350.000	± 50.000	52082	0xCB72
400.000	± 57.142	59522	0xE882
440.402	± 62.915	65535	0xFFFF

Table 4-11: Debounce Time / Examples

5 PCI9030 Target Chip

5.1 PCI Configuration Registers (PCR)

5.1.1 PCI9030 Header

PCI CFG Register Address	Write '0' to all unused (Reserved) bits				PCI writeable	Initial Values (Hex Values)
	31 24	23 16	15 8	7 0		
0x00	Device ID		Vendor ID		N	029F 1498
0x04	Status		Command		Y	0280 0000
0x08	Class Code			Revision ID	N	118000 00
0x0C	BIST	Header Type	PCI Latency Timer	Cache Line Size	Y[7:0]	00 00 00 00
0x10	PCI Base Address 0 for MEM Mapped Config. Registers				Y	FFFFFF80
0x14	PCI Base Address 1 for I/O Mapped Config. Registers				Y	FFFFFF81
0x18	PCI Base Address 2 for Local Address Space 0				Y	FFFFFFF1
0x1C	PCI Base Address 3 for Local Address Space 1				Y	00000000
0x20	PCI Base Address 4 for Local Address Space 2				Y	00000000
0x24	PCI Base Address 5 for Local Address Space 3				Y	00000000
0x28	PCI CardBus Information Structure Pointer				N	00000000
0x2C	Subsystem ID		Subsystem Vendor ID		N	s.b. 1498
0x30	PCI Base Address for Local Expansion ROM				Y	00000000
0x34	Reserved			New Cap. Ptr.	N	000000 40
0x38	Reserved				N	00000000
0x3C	Max_Lat	Min_Gnt	Interrupt Pin	Interrupt Line	Y[7:0]	00 00 01 00
0x40	PM Cap.		PM Nxt Cap.	PM Cap. ID	N	4801 00 01
0x44	PM Data	PM CSR EXT	PM CSR		Y	00 00 0000
0x48	Reserved	HS CSR	HS Nxt Cap.	HS Cap. ID	Y[23:16]	00 00 00 06
0x4C	VPD Address		VPD Nxt Cap.	VPD Cap. ID	Y[31:16]	0000 00 03
0x50	VPD Data				Y	00000000

Table 5-1 : PCI9030 Header

Subsystem ID: TPMC671-10: 0x000A

TPMC671-11: 0x000B

TPMC671-20: 0x0014

TPMC671-21: 0x0015

5.1.2 PCI Base Address Initialization

PCI Base Address Initialization is scope of the PCI host software.

PCI9030 PCI Base Address Initialization:

1. Write 0xFFFF_FFFF to the PCI9030 PCI Base Address Register.
2. Read back the PCI9030 PCI Base Address Register.
3. For PCI Base Address Registers 0:5, check bit 0 for PCI Address Space:

   Bit 0 = '0' requires PCI Memory Space mapping

   Bit 0 = '1' requires PCI I/O Space mapping

   For the PCI Expansion ROM Base Address Register, check bit 0 for usage:

   Bit 0 = ‘0’: Expansion ROM not used

   Bit 0 = ‘1’: Expansion ROM used
4. For PCI I/O Space mapping, starting at bit location 2, the first bit set determines the size of the required PCI I/O Space size.

   For PCI Memory Space mapping, starting at bit location 4, the first bit set to '1' determines the size of the required PCI Memory Space size.

   For PCI Expansion ROM mapping, starting at bit location 11, the first bit set to '1' determines the required PCI Expansion ROM size.

   For example, if bit 5 of a PCI Base Address Register is detected as the first bit set to ‘1’, the PCI9030 is requesting a 32 byte space (address bits 4:0 are not part of base address decoding).
5. Determine the base address and write the base address to the PCI9030 PCI Base Address Register. For PCI Memory Space mapping the mapped address region must comply with the definition of bits 3:1 of the PCI9030 PCI Base Address Register.

After programming the PCI9030 PCI Base Address Registers, the software must enable the PCI9030 for PCI I/O and/or PCI Memory Space access in the PCI9030 PCI Command Register (Offset 0x04). To enable PCI I/O Space access to the PCI9030, set bit 0 to '1'. To enable PCI Memory Space access to the PCI9030, set bit 1 to '1'.

Offset in Config.	Description	Usage
0x10	PCI9030 LCR’s MEM	Used
0x14	PCI9030 LCR’s I/O	Used
0x18	PCI9030 Local Space 0	Used
0x1C	PCI9030 Local Space 1	Not used
0x30	Expansion ROM	Not used

Table 5-2 : PCI9030 PCI Base Address Usage

5.2 Local Configuration Register (LCR)

After reset, the PCI9030 Local Configuration Registers are loaded from the on board serial configuration EEPROM.

The PCI base address for the PCI9030 Local Configuration Registers is PCI9030 PCI Base Address 0 (PCI Memory Space) (Offset 0x10 in the PCI9030 PCI Configuration Register Space) or PCI9030 PCI Base Address 1 (PCI I/O Space) (Offset 0x14 in the PCI9030 PCI Configuration Register Space).

Do not change hardware dependent bit settings in the PCI9030 Local Configuration Registers.

Offset from PCI Base Address	Register	Value
0x00	Local Address Space 0 Range	0x0FFF_FFF1
0x04	Local Address Space 1 Range	0x0000_0000
0x08	Local Address Space 2 Range	0x0000_0000
0x0C	Local Address Space 3 Range	0x0000_0000
0x10	Local Exp. ROM Range	0x0000_0000
0x14	Local Re-map Register Space 0	0x0000_0001
0x18	Local Re-map Register Space 1	0x0000_0000
0x1C	Local Re-map Register Space 2	0x0000_0000
0x20	Local Re-map Register Space 3	0x0000_0000
0x24	Local Re-map Register ROM	0x0000_0000
0x28	Local Address Space 0 Descriptor	0x0171_78A0
0x2C	Local Address Space 1 Descriptor	0x0000_0000
0x30	Local Address Space 2 Descriptor	0x0000_0000
0x34	Local Address Space 3 Descriptor	0x0000_0000
0x38	Local Exp. ROM Descriptor	0x0000_0000
0x3C	Chip Select 0 Base Address	0x0000_0009
0x40	Chip Select 1 Base Address	0x0000_0000
0x44	Chip Select 2 Base Address	0x0000_0000
0x48	Chip Select 3 Base Address	0x0000_0000
0x4C	Interrupt Control/Status	0x0041
0x4E	EEPROM Write Protect Boundary	0x0030
0x50	Miscellaneous Control Register	0x0078_0000
0x54	General Purpose I/O Control	0x0249_2492
0x70	Hidden1 Power Management data select	0x0000_0000
0x74	Hidden 2 Power Management data scale	0x0000_0000

Table 5-3 : PCI9030 Local Configuration Register

5.3 Configuration EEPROM

After power-on or PCI reset, the PCI9030 loads initial configuration register data from the on board configuration EEPROM.

The configuration EEPROM contains the following configuration data:

- Address 0x00 to 0x27 : PCI9030 PCI Configuration Register Values
- Address 0x28 to 0x87 : PCI9030 Local Configuration Register Values
- Address 0x88 to 0xFF : Reserved

See the PCI9030 Manual for more information.

Address	Offset							
	0x00	0x02	0x04	0x06	0x08	0x0A	0x0C	0x0E
0x00	0x029F	0x1498	0x0280	0x0000	0x1180	0x0000	s.b.	0x1498
0x10	0x0000	0x0040	0x0000	0x0100	0x4801	0x0001	0x0000	0x0000
0x20	0x0000	0x0006	0x0000	0x0003	0x0FFF	0xFFF1	0x0000	0x0000
0x30	0x0000	0x0000	0x0000	0x0000	0x0000	0x0000	0x0000	0x0001
0x40	0x0000	0x0000	0x0000	0x0000	0x0000	0x0000	0x0000	0x0000
0x50	0x0171	0x78A0	0x0000	0x0000	0x0000	0x0000	0x0000	0x0000
0x60	0x0000	0x0000	0x0000	0x0009	0x0000	0x0000	0x0000	0x0000
0x70	0x0000	0x0000	0x0030	0x0041	0x0078	0x0000	0x0249	0x2492
0x80	0x0000	0x0000	0x0000	0x0000	0xFFFF	0xFFFF	0xFFFF	0xFFFF
0x90	0xFFFF	0xFFFF	0xFFFF	0xFFFF	0xFFFF	0xFFFF	0xFFFF	0xFFFF
0xA0	0xFFFF	0xFFFF	0xFFFF	0xFFFF	0xFFFF	0xFFFF	0xFFFF	0xFFFF
0xB0	0xFFFF	0xFFFF	0xFFFF	0xFFFF	0xFFFF	0xFFFF	0xFFFF	0xFFFF
0xC0	0xFFFF	0xFFFF	0xFFFF	0xFFFF	0xFFFF	0xFFFF	0xFFFF	0xFFFF
0xD0	0xFFFF	0xFFFF	0xFFFF	0xFFFF	0xFFFF	0xFFFF	0xFFFF	0xFFFF
0xE0	0xFFFF	0xFFFF	0xFFFF	0xFFFF	0xFFFF	0xFFFF	0xFFFF	0xFFFF
0xF0	0xFFFF	0xFFFF	0xFFFF	0xFFFF	0xFFFF	0xFFFF	0xFFFF	0xFFFF

Table 5-4 : Configuration EEPROM TPMC671-xx

Subsystem-ID Value (Offset 0x0C): TPMC671-10: 0x000A

TPMC671-11: 0x000B

TPMC671-20: 0x0014

TPMC671-21: 0x0015

5.4 Local Software Reset

The PCI9030 Local Reset Output LRESETo# is used to reset the on board local logic.

The PCI9030 local reset is active during PCI reset or if the PCI Adapter Software Reset bit is set in the PCI9030 local configuration register CNTRL (offset 0x50).

CNTRL[30] PCI Adapter Software Reset:

Value of 1 resets the PCI9030 and issues a reset to the Local Bus (LRESETo# asserted). The PCI9030 remains in this reset condition until the PCI Host clears this bit. The contents of the PCI9030 PCI and Local Configuration Registers are not reset. The PCI9030 PCI Interface is not reset.

6 Configuration Hints

6.1 Software Reset (Controller and LRESET#)

A host on the PCI bus can set the software reset bit in the Miscellaneous Control Register (CNTRL; 0x50) of the PCI Controller PCI9030 to reset the Controller and assert LRESET# output. The PCI9030 remains in this reset condition until the PCI host clears the software reset bit.

6.2 Big / Little Endian

- PCI – Bus (Little Endian)

Byte 0	AD[7..0]
Byte 1	AD[15..8]
Byte 2	AD[23..16]
Byte 3	AD[31..24]

- Every Local Address Space (0...3) and the Expansion ROM Space can programmed to operate in Big or Little Endian Mode.

Big Endian		**Little Endian**	
32 Bit		**32 Bit**	
Byte 0	D[31..24]	Byte 0	D[7..0]
Byte 1	D[23..16]	Byte 1	D[15..8]
Byte 2	D[15..8]	Byte 2	D[23..16]
Byte 3	D[7..0]	Byte 3	D[31..24]
16 Bit upper lane		**16 Bit**	
Byte 0	D[31..24]	Byte 0	D[7..0]
Byte 1	D[23..16]	Byte 1	D[15..8]
16 Bit lower lane			
Byte 0	D[15..8]		
Byte 1	D[7..0]		
8 Bit upper lane		**8 Bit**	
Byte 0	D[31..24]	Byte 0	D[7..0]
8 Bit lower lane			
Byte 0	D[7..0]		

Table 6-1 : Local Bus Little/Big Endian

Standard use of the TPMC671:

Local Address Space 0	16 bit bus in Big Endian Mode
Local Address Space 1	not used
Local Address Space 2	not used
Local Address Space 3	not used
Expansion ROM Space	not used

To change the Endian Mode use the Local Configuration Registers for the corresponding Space. Bit 24 of the according register sets the Mode. A value of 1 indicates Big Endian and a value of 0 indicates Little Endian.

For further information please refer to the PCI9030 manual which is also part of the TPMC671-ED Engineering Documentation.

Use the PCI Base Address 0 + Offset or PCI Base Address 1 + Offset:

Short cut Offset	Name	
LAS0BRD	0x28	Local Address Space 0 Bus Region Description Register
LAS1BRD	0x2C	Local Address Space 0 Bus Region Description Register
LAS2BRD	0x30	Local Address Space 0 Bus Region Description Register
LAS3BRD	0x34	Local Address Space 0 Bus Region Description Register
EROMBRD	0x38	Expansion ROM Bus Region Description Register

You could also use the PCI - Base Address 1 I/O Mapped Configuration Registers.

7 Installation

7.1 Input Wiring

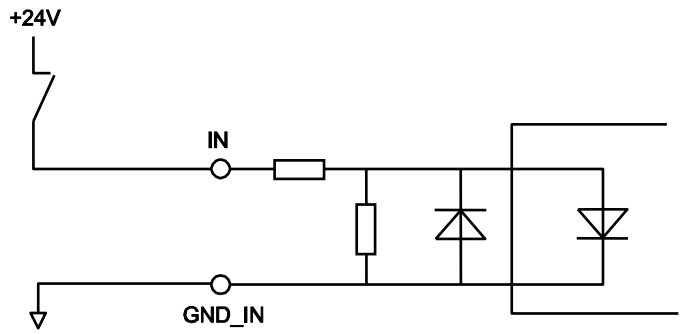

Figure 7-1 : Input Wiring

7.2 Output Wiring High Side Switch (-10 / -20)

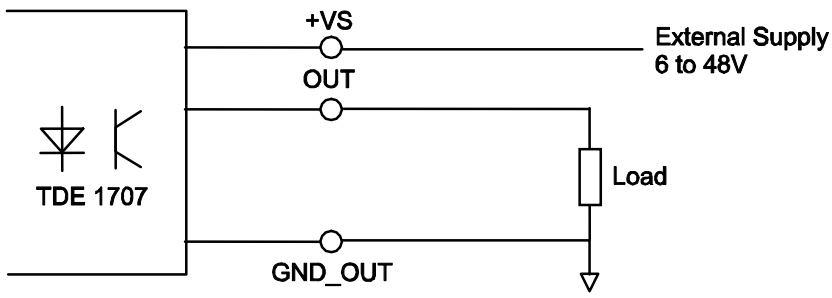

Figure 7-2 : Output Wiring High Side Switch

7.3 Output Wiring Low Side Switch (-11 / -21)

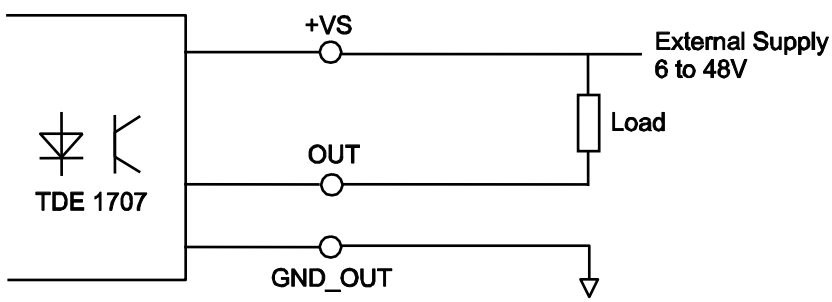

Figure 7-3 : Output Wiring Low Side Switch

8 Pin Assignment – I/O Connector

8.1 Front Panel Connector

Pin	Signal	Description	Pin	Signal	Description
1	OUT 1	Output Line 1	35	VS_O2	External Supply OUT5 .. OUT8
2	OUT 2	Output Line 2	36	VS_O2	External Supply OUT5 .. OUT8
3	OUT 3	Output Line 3	37	VS_O3	External Supply OUT9 .. OUT12
4	OUT 4	Output Line 4	38	VS_O3	External Supply OUT9 .. OUT12
5	OUT 5	Output Line 5	39	VS_O4	External Supply OUT13 .. OUT16
6	OUT 6	Output Line 6	40	VS_O4	External Supply OUT13 .. OUT16
7	OUT 7	Output Line 7	41	GND_O1	Ground OUT 1 .. OUT 4
8	OUT 8	Output Line 8	42	GND_O1	Ground OUT 1 .. OUT 4
9	OUT 9	Output Line 9	43	GND_O2	Ground OUT 5 .. OUT 8
10	OUT 10	Output Line 10	44	GND_O2	Ground OUT 5 .. OUT 8
11	OUT 11	Output Line 11	45	GND_O3	Ground OUT 9 .. OUT 12
12	OUT 12	Output Line 12	46	GND_O3	Ground OUT 9 .. OUT 12
13	OUT 13	Output Line 13	47	GND_O4	Ground OUT 13 .. OUT 16
14	OUT 14	Output Line 14	48	GND_O4	Ground OUT 13 .. OUT 16
15	OUT 15	Output Line 15	49	IN 1-	Ground IN 1
16	OUT 16	Output Line 16	50	IN 2-	Ground IN 2
17	IN 1+	Input Line 1	51	IN 3-	Ground IN 3
18	IN 2+	Input Line 2	52	IN 4-	Ground IN 4
19	IN 3+	Input Line 3	53	IN 5-	Ground IN 5
20	IN 4+	Input Line 4	54	IN 6-	Ground IN 6
21	IN 5+	Input Line 5	55	IN 7-	Ground IN 7
22	IN 6+	Input Line 6	56	IN 8-	Ground IN 8
23	IN 7+	Input Line 7	57	IN 9-	Ground IN 9
24	IN 8+	Input Line 8	58	IN 10-	Ground IN 10
25	IN 9+	Input Line 9	59	IN 11-	Ground IN 11
26	IN 10+	Input Line 10	60	IN 12-	Ground IN 12
27	IN 11+	Input Line 11	61	IN 13-	Ground IN 13
28	IN 12+	Input Line 12	62	IN 14-	Ground IN 14
29	IN 13+	Input Line 13	63	IN 15-	Ground IN 15
30	IN 14+	Input Line 14	64	IN 16-	Ground IN 16
31	IN 15+	Input Line 15	65	n.c.	Not Used
32	IN 16+	Input Line 16	66	n.c.	Not Used
33	VS_O1	External Supply OUT1 .. OUT4	67	n.c.	Not Used
34	VS_O1	External Supply OUT1 .. OUT4	68	n.c.	Not Used

Table 8-1 : Pin Assignment I/O HD68 SCSI-3 type Connector

Please check the maximum current of the used connection cable. Some standard cables (AWG28 68pin) are limited to 0.75 A per lead.

8.2 Mezzanine Card Connector P14

Pin	Signal	Description	Pin	Signal	Description
1	OUT 1	Output Line 1	2	OUT 2	Output Line 2
3	OUT 3	Output Line 3	4	OUT 4	Output Line 4
5	OUT 5	Output Line 5	6	OUT 6	Output Line 6
7	OUT 7	Output Line 7	8	OUT 8	Output Line 8
9	OUT 9	Output Line 9	10	OUT 10	Output Line 10
11	OUT 11	Output Line 11	12	OUT 12	Output Line 12
13	OUT 13	Output Line 13	14	OUT 14	Output Line 14
15	OUT 15	Output Line 15	16	OUT 16	Output Line 16
17	IN 1+	Input Line 1	18	IN 2+	Input Line 2
19	IN 3+	Input Line 3	20	IN 4+	Input Line 4
21	IN 5+	Input Line 5	22	IN 6+	Input Line 6
23	IN 7+	Input Line 7	24	IN 8+	Input Line 8
25	IN 9+	Input Line 9	26	IN 10+	Input Line 10
27	IN 11+	Input Line 11	28	IN 12+	Input Line 12
29	IN 13+	Input Line 13	30	IN 14+	Input Line 14
31	IN 15+	Input Line 15	32	IN 16+	Input Line 16
33	VS_O1	External Supply OUT1 .. OUT4	34	VS_O1	External Supply OUT1 .. OUT4
35	VS_O2	External Supply OUT5 .. OUT8	36	VS_O2	External Supply OUT5 .. OUT8
37	VS_O3	External Supply OUT9 .. OUT12	38	VS_O3	External Supply OUT9 .. OUT12
39	VS_O4	External Supply OUT13 .. OUT16	40	VS_O4	External Supply OUT13 .. OUT16
41	GND_O1	Ground OUT 1 .. OUT 4	42	GND_O1	Ground OUT 1 .. OUT 4
43	GND_O2	Ground OUT 5 .. OUT 8	44	GND_O2	Ground OUT 5 .. OUT 8
45	GND_O3	Ground OUT 9 .. OUT 12	46	GND_O3	Ground OUT 9 .. OUT 12
47	GND_O4	Ground OUT 13 .. OUT 16	48	GND_O4	Ground OUT 13 .. OUT 16
49	IN 1-	Ground IN 1	50	IN 2-	Ground IN 2
51	IN 3-	Ground IN 3	52	IN 4-	Ground IN 4
53	IN 5-	Ground IN 5	54	IN 6-	Ground IN 6
55	IN 7-	Ground IN 7	56	IN 8-	Ground IN 8
57	IN 9-	Ground IN 9	58	IN 10-	Ground IN 10
59	IN 11-	Ground IN 11	60	IN 12-	Ground IN 12
61	IN 13-	Ground IN 13	62	IN 14-	Ground IN 14
63	IN 15-	Ground IN 15	64	IN 16-	Ground IN 16

Table 8-2 : Mezzanine Card Connector P14

Please verify that the tracks from the P14 connector to the Px connector of the PMC carrier board are designed for a current of typical 0.5 A min per output.